Assembling instruction

1 BACK	2 SEAT
	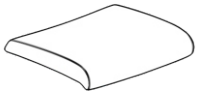
3 ARMREST	**4 SHELF**
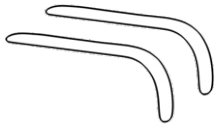	

5

(0)	X2	(5X55)MM	
(1)	X4	(6X20)MM	
(2)	X6	(6X25)MM	
(3)	X2	(8X35)MM	
(4)	X1	4MM	
(5)	X1	5MM	

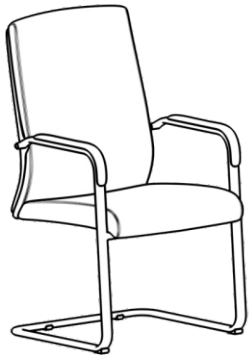

A

5-(1) X 4



B

5-(3) X 2

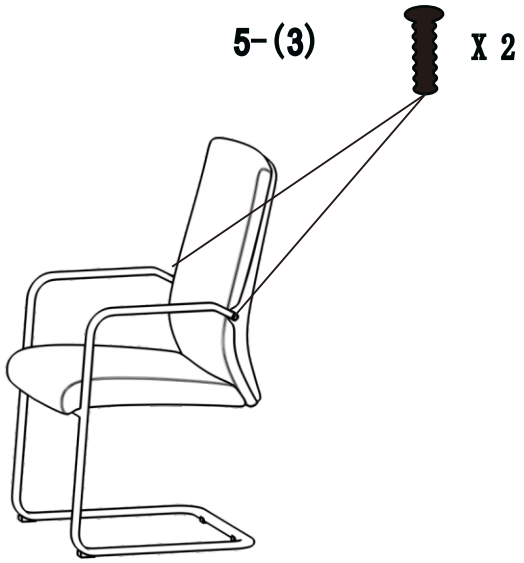

C

5-(0) X 2

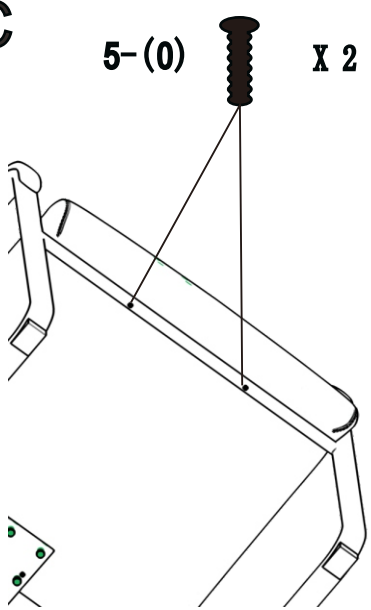

D

5-(2) X 3

